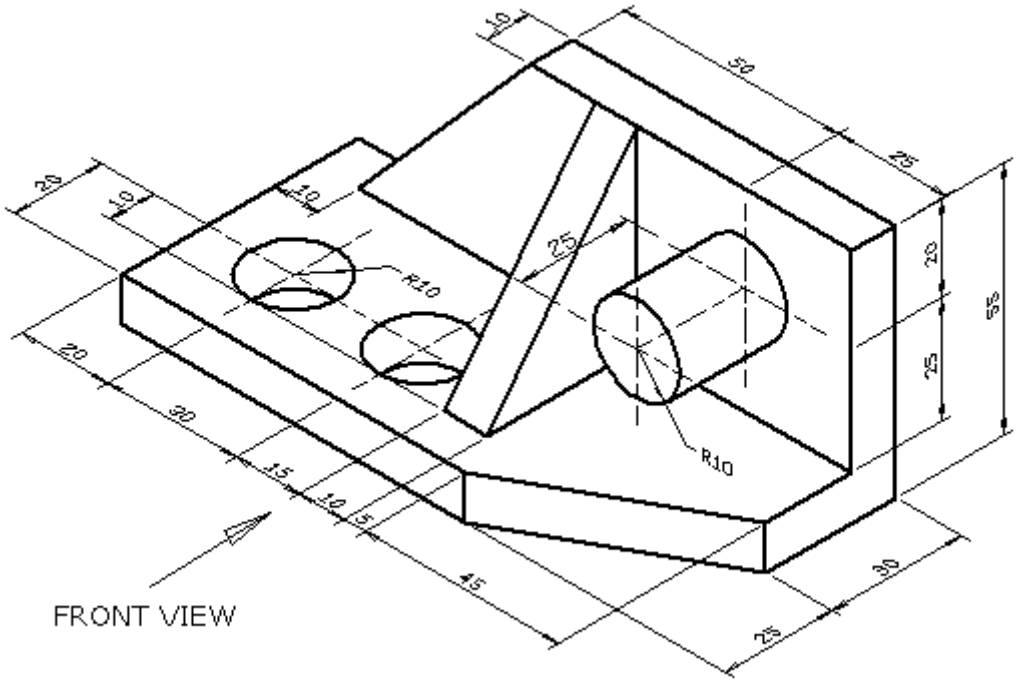3. FRAME SUPPORT